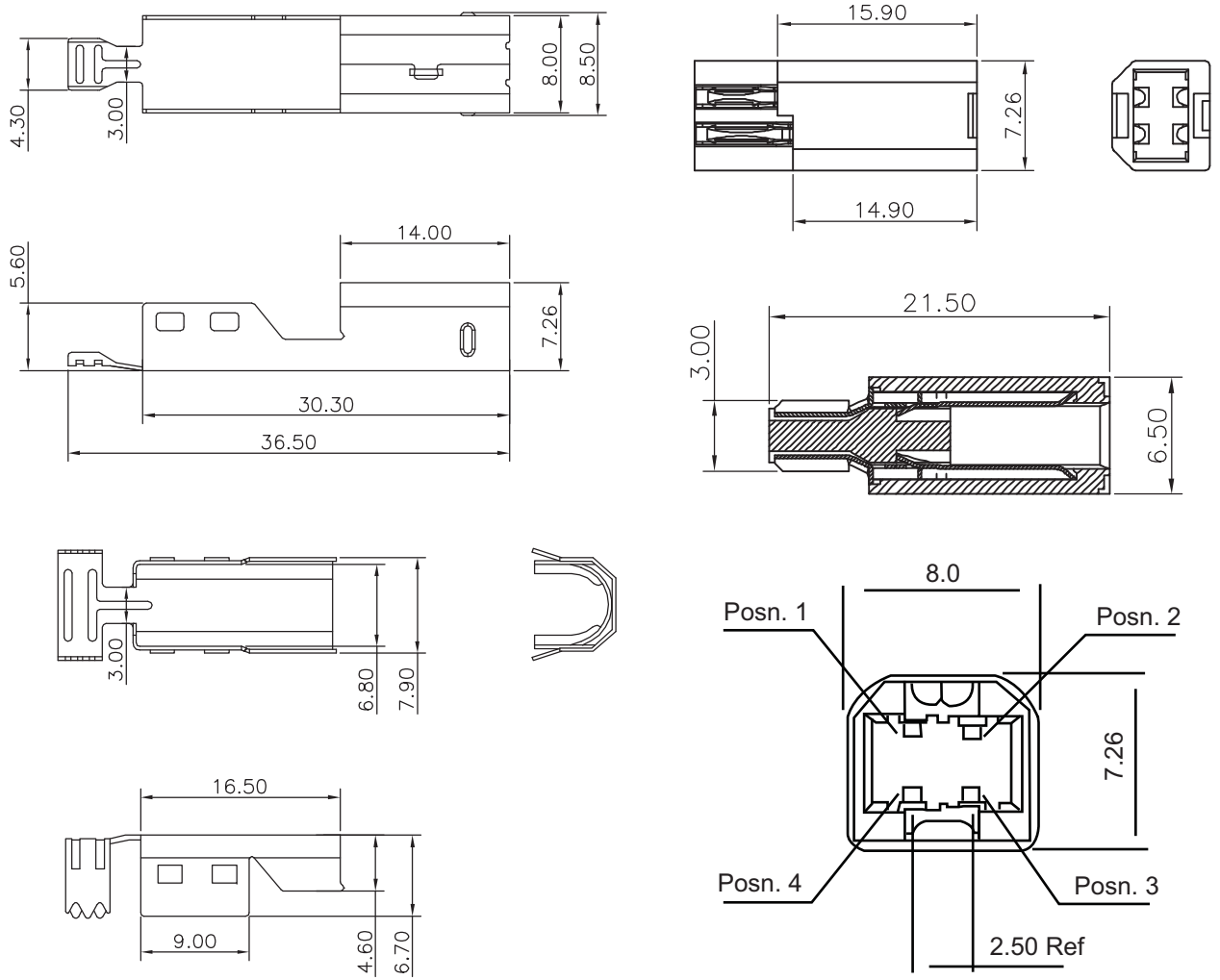

Material:

- Housing: PBT+30%GF UL 94V-0
- Contact: Brass
- Shell: SPCC
- Contact: 30μ Gold Contact Plating over Nickel Plated
- Shell: Nickel Over All Plating

Electrical:

- Voltage Rating: 30V
- Current Rating: 1.5A
- Contact Resistance Terminal: 30MΩ Max
- Dielectric Withstanding Voltage: 500V AC
- Insulation Resistance: 1000MΩ Min

Mechanical:

- Mating: 35N Max
- Withdrawl Force: 10N Min
- Durability: 1500 Cycles Min

Environmental:

- Temperature Range: -20°~+85°C

Unit: MM±0.15MM

Scale	1:1
TOLERANCE	
X.X	±0.40
X.XX	±0.25
X.XXX	±0.15
Angle	±3°

Modification	Date	Name

		Name
Drawn	10.19.11	Chappell
Approved		

Item No.

A-USBPB-2-R

Title: USB, Type B, Assembly-Type, Version 2.0

Drawing No.

rev00

Replace

Sheet

RoHS Complaint

ASSMANN WSW components